TECH LINK

Mid-November 2017, Volume 19, No. 22

GM Auto Engine Stop/Start Systems

The Engine Stop/Start system, which automatically turns off the engine when the vehicle comes to a stop in appropriate driving conditions, can reduce fuel consumption and carbon dioxide (CO2) emissions by up to 5% in mixed driving conditions. In an urban environment and in heavy traffic with frequent stops, the savings may increase to as much as 10%. These numbers show why the Stop/Start system (RPO KL9) has grown to become standard equipment on many GM models.

First introduced in the 2014 model year, the following models offer a Stop/Start system: 2014-2018 Malibu; 2015-2018 Impala; 2016-2018 Encore, Envision, CT6, Cruze; 2017 Verano; 2017-2018 LaCrosse, Regal, ATS, CTS, XT5, Trax, Acadia (VIN N); and 2018 Equinox and Terrain.

The Stop/Start system will automatically turn off the engine, referred to as an Auto Stop, when the brake pedal is applied and the vehicle is at a complete stop, if various operating conditions are met. Once the brake pedal is released or the accelerator pedal is depressed, the engine will restart. It takes about 0.3 seconds for the engine to start from the time the brake pedal transition initiates the restart.

Three Systems

There are three types of 12V Stop/Start systems that have been used in GM vehicles:

- The Two-Battery system that includes an auxiliary 12-volt battery.
- The DC to DC system that features a power supply transformer.
- The Ultra Capacitor system that has capacitors that provide a voltage boost during engine restarts.

continued on page 2

CONTENTS

GM Customer Care and Aftersales

GM Auto Engine Stop/Start Systems

– continued from page 1

All Stop/Start systems operate fundamentally in the same way. The Engine Control Module (ECM) monitors a number of inputs — such as the engine coolant temperature, vehicle speed, hood ajar switch, brake booster vacuum, battery current, brake pedal position, accelerator pedal position, and engine speed — to determine when the engine should be turned off. The ECM also controls the auxiliary coolant pump motor for cabin heating and, depending on the vehicle, the auxiliary transmission fluid pump motor or auxiliary transmission fluid accumulator solenoid valve that maintains proper transmission fluid pressures while the engine is off.

There are a number of other components that work together to determine Stop/Start system activity. The Transmission Control Module (TCM) monitors the gear selection. The vehicle must be in Drive to turn off the engine. The Body Control Module (BCM) monitors data on the state of the battery based on the battery sensor module along with the Heating, Ventilation and Air Conditioning (HVAC) system settings.

The Stop/Start system also uses an enhanced starter motor to better manage the greater number of engine starts. It has a high performance electric motor and a stronger pinion engagement mechanism than a conventional starter. It also has independent control of the pinion and motor.

Two-Battery System

The Two-Battery system includes the primary 12V battery as well as an auxiliary 12V battery. Both batteries are Absorbent Glass Mat (AGM) batteries. AGM batteries are used in all GM models with a Stop/Start system. The auxiliary battery is used to power vehicle loads, except the starter, during stop/start cranking events. The Dual Battery Control Module switches primary and auxiliary batteries in and out at appropriate times to support vehicle loads and battery charging. The Two-Battery Stop/Start system is automatically activated each time the ignition switch is turned on.

Primary and auxiliary batteries and the Dual Battery Control Module

DC to DC System

In a DC to DC system, the power supply transformer, or DC to DC converter, helps power the vehicle loads temporarily when the engine cranks. The power supply transformer monitors battery voltage and provides a boost of voltage when the engine restarts to ensure proper operation of the radio, instrument cluster and other components.

The climate controls on some vehicles feature an ECO (economy) switch that can change the air conditioning mode to Off, Comfort, or Economy. These settings change the parameters for the activation of the Stop/Start system. In Comfort mode, the focus is on passenger comfort. While in Economy mode, the focus is on fuel economy.

Power Supply Transformer

Currently, on Cadillac models with the DC to DC system, the Stop/Start function can be disabled with the Stop/Start button on the instrument panel.

Ultra Capacitor System

The Ultra Capacitor system also provides a burst of power to help restart the engine along with providing additional power to the vehicle's electrical system. The high voltage drop caused by current drawn during an engine restart is compensated by the voltage provided by the two double-layer capacitors, which store energy in an electric field. The capacitors are switched in series to the standard battery and are controlled by the Stop/Start Capacitor Control Module (SSCCM). The SSCCM controls the charging and discharging of the capacitors and communicates with the ECM.

Ultra capacitors

When the engine starts, the module charges the capacitors to a voltage in the range of 3.2– 4.5 V (depending on the vehicle engine). In normal operating mode, the module connects the battery to chassis ground. During an engine restart, the module opens the switch to ground and closes the switch to the capacitors to provide a boost in voltage to the vehicle's electrical system.

The Ultra Capacitor system features a Stop/Start disable switch located on the instrument panel or center console. The Stop/Start system is enabled at every ignition cycle.

TIP: Follow all Service Information diagnostic and repair procedures to discharge the Ultra Capacitor system when requested.

Enabling Criteria

The following vehicle conditions must be met for an Auto Stop event to take place.

continued on page 3

GM Auto Engine Stop/Start Systems

– continued from page 2

- Initial minimum vehicle speed during the drive cycle must reach 12 MPH (19 km/h). Subsequent minimum speed may vary from 1-6 MPH (2-10 km/h), depending on the vehicle.
- In a vehicle with a manual transmission, the transmission must be in Neutral and the clutch pedal fully released.
- Ambient and engine coolant temperature correlation must meet specified values.

Stop/Start disable switch

- Ambient and transmission fluid temperature correlation must meet specified values.
- Hood switch status is closed.
- Brake pedal is depressed beyond a specific value (approximately 27%).
- Accelerator pedal is in the learned home position.
- Brake booster vacuum is greater than 45 kPa (7 PSI).
- Transmission gear selector is in the Drive position.
- Vehicle speed is less than 3 MPH (5 km/h).
- Engine speed is below 1500 RPM.
- Engine coolant temperature is less than 248°F (120°C).
- No A/C compressor request from the HVAC system (A/C or Defrost modes).
- Battery voltage greater than 12 V.
- Battery state of charge in the ECM is greater than 75% (changes with state of health).

The following conditions will enable an engine restart.

- Transmission gear selector is moved from the Drive position.
- In a vehicle with a manual transmission, the driver depresses the clutch pedal.
- Driver removes pressure from the brake or depresses the accelerator pedal while the vehicle is in the Drive.
- Brake booster vacuum is less than 40 kPa (6 PSI).
- A/C compressor request from HVAC (A/C or Defrost modes).
- Battery voltage less than 11 V.

Auto Stop mark on the tachometer

- Battery state of charge is less than 73% (changes with state of health).
- Hood switch status changes to open.
- Auto Stop time exceeds 2 minutes.

Thanks to Dan Jaszkowski and Jack Woodward

2018 Mark of Excellence Program Enrollment

The 2018 GM Mark of Excellence Recognition Program enrollment period is going on now through January 31, 2018. All U.S. GM dealers are encouraged to enroll their service technicians in the program, which recognizes top dealership service technicians with the National Service Technician Awards for their achievements in technical training, product knowledge, customer satisfaction score, and years of service.

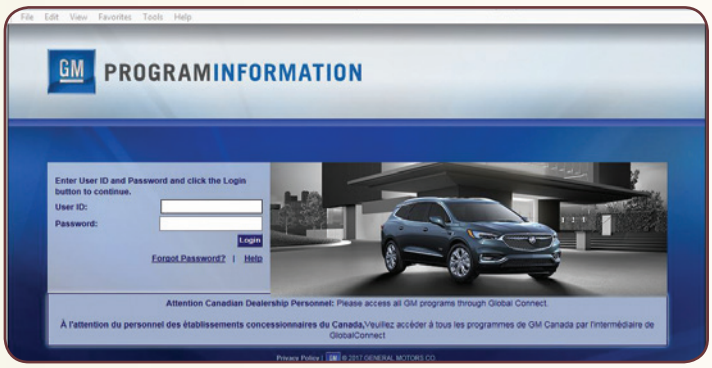

Technicians must be enrolled prior to July 1, 2018 to be eligible for the program. There is a monthly fee for each technician the dealership chooses to enroll.

The 2018 Program Rules for service technicians covers eligibility, awards, criteria, and general program details. Enrollment information and monthly reports (starting in March 2018) are available at GM Program Info through the GlobalConnect portal or at www.gmprogramino.com.

Earn Points

Service technicians can earn ranking points in the program by meeting the following criteria:

- Ranking in the top 40% nationally or higher in the Fix It Right The First Time qualifier
- Completing a minimum of four Emerging Issues seminars with a score of 80% or better. 50 early return points per video/test awarded if the seminar is completed within the first 30 days of availability.

continued on page 7

Enhanced Starter Motor Operation in Engine Stop/ Start Systems

The Engine Stop/Start system in GM vehicles automatically turns off the engine when the vehicle comes to a stop under certain driving conditions, and can quickly restart the engine in about 0.3 seconds when commanded to do so.

A Stop/Start system is available on 2014-2018 Malibu; 2015-2018 Impala; 2016-2018 Encore, Envision, CT6, Cruze; 2017 Verano; 2017-2018 LaCrosse, Regal, ATS, CTS, XT5, Trax, Acadia (VIN N); and 2018 Equinox and Terrain models.

In order to smoothly restart the engine as quickly as possible while managing the greater number of engine starts, the Stop/Start system uses an enhanced starter motor that operates differently from a conventional starter motor. It has a high performance electric motor and a stronger pinion engagement mechanism than a conventional starter. It also has independent control of the pinion and motor.

Independent Control

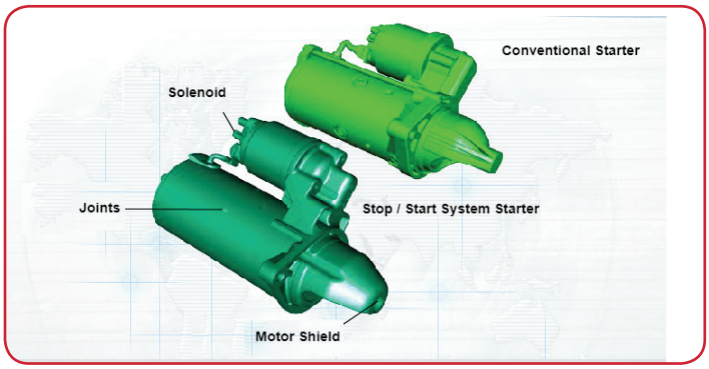

Enhanced starter motor and conventional starter motor

The enhanced starter motor continues using the typical pinion engagement mechanism with a starter solenoid that drives the pinion gear to engage or disengage the flywheel of the engine. When engaged, the starter motor can rotate the engine flywheel and, in turn, the crankshaft. However, there are two differences in the solenoid. It now has two parts.

On a conventional starter, the starter solenoid serves the dual purpose of providing the high-current switch that completes the battery positive current to the DC electric motor and the mechanical solenoid action to push the pinion gear into the flywheel of the engine. The Starter Relay is controlled by the ECM.

But on the enhanced starter of a Stop/Start system, these two functions are separated into two different functions inside the solenoid, with each function controlled individually by the ECM. There are two separate relays to control the two separate parts of the enhanced solenoid:

- Starter Motor Relay
- Starter Pinion Solenoid Actuator Relay

The two individually-controlled relays allow for smooth engagement of the pinion gear into the flywheel with minimum noise and wear.

Auto Stop Operation

When the vehicle is coming to a stop, just before the engine stops rotating (at approximately 50 RPM) during stop/start operation, the ECM energizes the Starter Pinion Solenoid Actuator Relay to easily push the pinion gear into the flywheel gear without gear clash.

When the engine stops rotating during Stop/Start operation (Auto Stop mode), the starter pinion gear is fully engaged, ready for the starter motor to become energized to quickly start the engine again.

Slowing, but Not Stopping

A secondary need for the starter pinion to be driven into the flywheel gear before the engine stops rotating is to address quickly changing demands on the engine. For example, when a driver is slowing nearly to a stop — and the Stop/Start system is preparing for Auto Stop mode — but suddenly decides to release the brake and accelerate

In this situation, the engine has already stopped rotating, or nearly so. A conventional starter cannot restart the engine until the engine has completely stopped. However, with the enhanced starter, the starter pinion gear is fully engaged and ready to begin rotating the engine even before it fully stops turning. Otherwise, the engine would actually have to stop rotating before the pinion can engage smoothly to begin a restart.

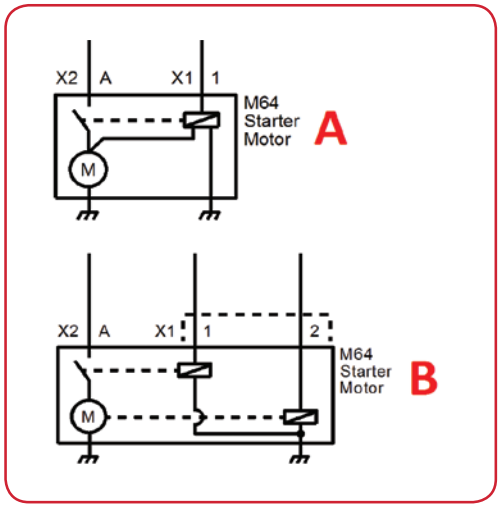

A. Conventional starter motor
B. Enhanced starter motor with independent control of the pinion and motor

To prevent a lag in engine operation, the ECM uses predictive speed matching of the flywheel gear speed and the pinion gear speed to engage the pinion gear into the flywheel gear without gear clash before the engine fully stops. By predicting how long it takes the starter motor to spin up using an algorithm, the pinion gear speed can be matched to the flywheel gear speed. The result is an almost instant restart that is possible at extremely low engine speeds.

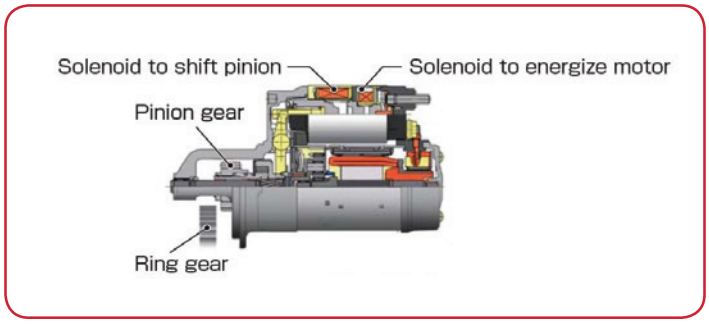

The ECM energizes the Starter Pinion Solenoid Actuator Relay to push the pinion gear into the flywheel gear.

Thanks to Dan Jaszkowski and Jack Woodward

New Pedestrian Impact Detection System

A new safety system on the 2018 Buick Regal is the Pedestrian Impact Detection System (PIDS). Its primary function is to provide supplemental protection to pedestrians involved in vehicle impacts by raising the hood to create sufficient vertical deformation space. In Europe and Japan, an active pedestrian impact detection system is necessary for vehicles that do not provide the required deformation space under the hood.

PIDS lifts the rear part of the hood during a frontal impact to reduce pedestrian injuries.

The Pedestrian Impact Detection System includes the following components

- Inflatable Restraint Sensing and Diagnostic Module
- Front Left Pedestrian Impact Detection Sensor
- Front Right Pedestrian Impact Detection Sensor
- Two Hood Hinge Actuators

The hood hinge actuators elevate the rear edge of the hood.

PIDS Operation

PIDS is designed to lift the rear part of the hood when a pedestrian impact is detected during a frontal collision within the approximate calibrated speed range of 14 mph (22 km/h) and 31 mph (50 km/h). When the vehicle is involved in a frontal collision, sensors in the front bumper determine the force applied by the object to the front bumper. Upon identifying the pedestrian, within 40 milliseconds, the system deploys the hood hinge actuators that elevate the rear edge of the hood.

The system is designed to sense and discriminate road user impacts (e.g. pedestrians and cyclists) from other types of impacts in order to properly deploy the hood actuators. The two sensors located under the outer bumper fascia are connected together by a tube (serviced as an assembly) and provide force information to the Inflatable Restraint Sensing and Diagnostic Module to differentiate a human pedestrian from animals and other obstacles. The hood actuators are not expected to deploy in a low severity event where the risk of injury is low or in a high severity event like a vehicle-to-vehicle collision.

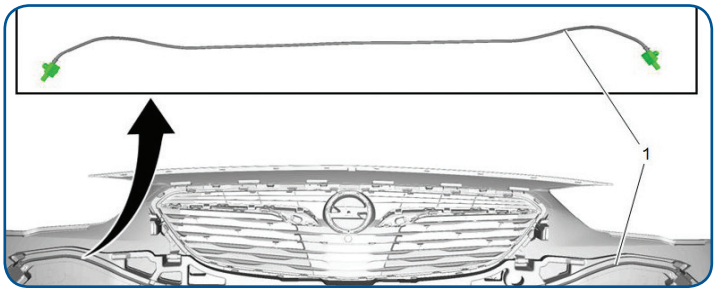

Pedestrian Impact Detection sensors on the front fascia

PIDS may not activate if:

- The pedestrian impact is outside the range of the sensors.
- The sensors on the front bumper are damaged.
- The path of the lifting hood is blocked by snow or ice.
- Aftermarket equipment is attached to the front bumper.
- Vehicle speed at impact is outside the calibrated speed range.
- The vehicle impacts a small object.

After Deployment

After PIDS has deployed, the hood will remain in the raised position and the driver's view will be reduced by the raised hood. If a towing service is not available, the hood may be repositioned temporarily. Refer to the Owner's Manual.

The system will not be fully functional again until the hood assembly, including the hinges, latch, and actuators, are replaced. If the sensors also are replaced, inspect the front fascia and fascia energy absorber for any damage that may interfere with proper system operation.

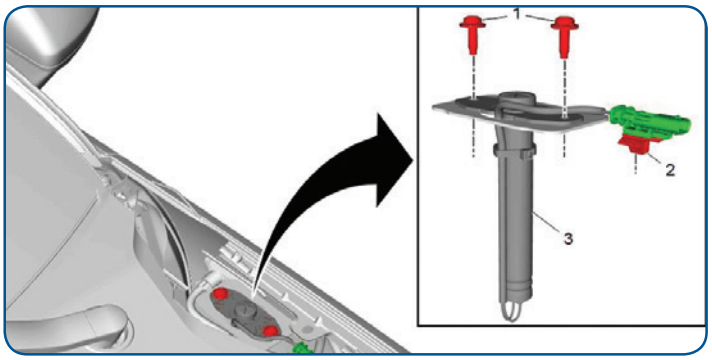

Active hood hinge actuator

System Disabling during Service

PIDS should be disabled when performing repairs to the system or servicing a component near or attached to a PIDS component. The system can be disabled by removing the fuse supplying power to the PIDS or by disconnecting the negative battery cable. Refer to the appropriate Service Information when servicing the system.

TIP: Wait one minute before working on any components after disabling the system. PIDS maintains a reserve energy supply that provides deployment power for the hood hinge actuators if the system loses battery power during a collision. Deployment power is available for as much as one minute after disconnecting the vehicle power.

Thanks to Sherman Dixon and Lori Brohl

Rear Camera Image Distortion

The Rear Vision Camera or Surround Vision Camera on some 2018 Traverse and Enclave models may have a yellow or blue display with a blurry or distorted image, a display showing only gridlines, or a blue screen with a Service Rear Vision System message displayed. These conditions may be present with or without any set DTCs.

Yellow camera image

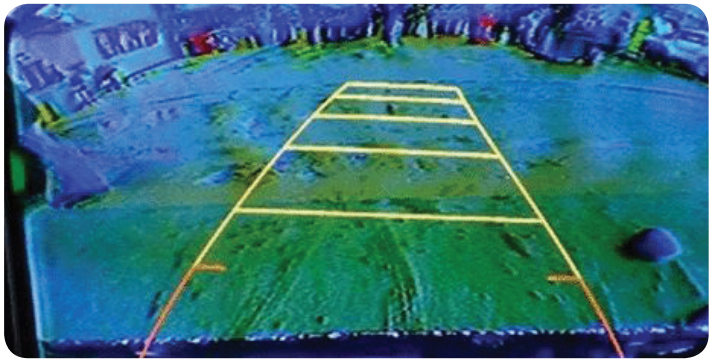

Distorted camera image

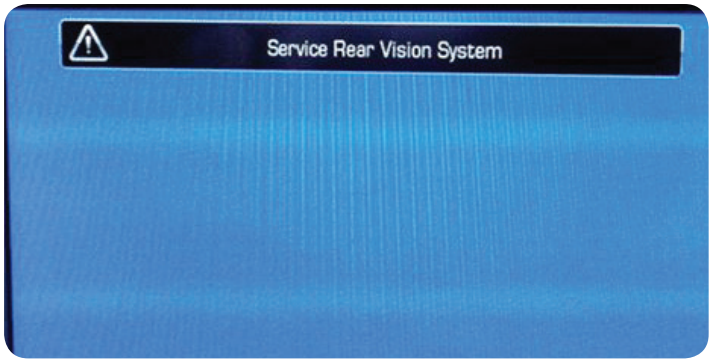

Service Rear Vision System message

These camera display conditions may be caused by a poor connection in the camera signal circuits 6972 and/or 6973 (without Surround Vision Camera RPO UVH).

The standard rear camera signal circuits 6972 and 6973 run from the B87 Rear Camera to the K188 Human Machine Interface (HMI) bypass module to the K74 HMI module.

For the 360 degree Camera system (RPO UVH), the camera signal circuits 6972 and 6973 run from the B87 Rear Camera and the K157 Video Processing Module to the K188 HMI Bypass Module to the K74 HMI Module.

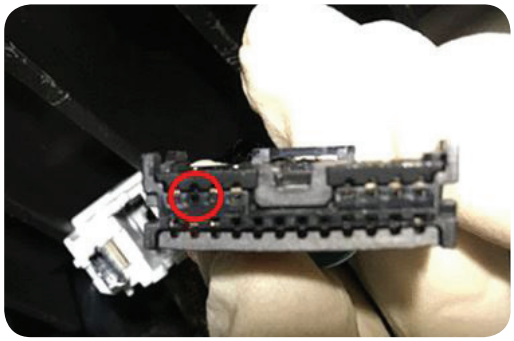

Damaged terminal

If the cause has not been found after performing the normal diagnostics as outlined in the appropriate Service Information, inspect camera signal circuits 6972 and 6973 for an open circuit, high resistance, poor terminal tension, bent terminals, etc. Replace and/or repair any damaged terminals, module(s) with bent pins, or wiring as necessary.

Image Quality Diagnostic Tips

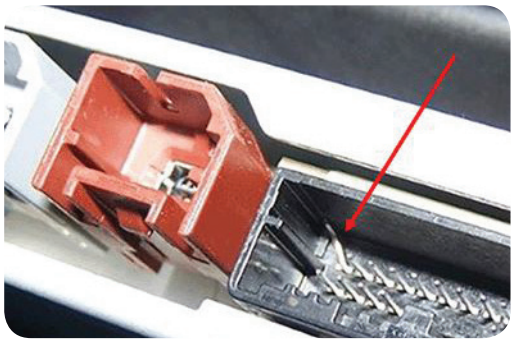

Bent pin

Depending on the lighting and build variation, some image quality conditions may be a normal characteristic rather than a quality issues in the parts, wiring or software.

Before replacing any parts, such as the Human Machine Interface (HMI) control module, Human Machine Interface Bypass Module (VBM), or Video Processing Module (VPM), compare the image quality to a like vehicle that is the same model year with the same infotainment RPO and the same rear camera system.

If there are DTCs stored, follow the appropriate Service Information diagnostics. Also inspect the following items:

- Clean the lens of the rear camera with isopropyl alcohol and a soft tissue (to avoid scratching the lens).
- Check connections at the camera and ensure that there is no corrosion or improper seating of the terminals or connector.
- Disconnect/reconnect the negative battery cable to determine if it corrects any of the concerns. If so, disconnect/reconnect the VPM, VBM, and/or HMI module one at a time to power cycle the module and isolate which one may be causing the concern.
- Check for loose connections, bent pins, and/or backed out/loose terminals at the VPM (if equipped), VBM (if equipped), and/or HMI module.
- Check for excessively taut cables/wiring related to the rear camera system. Wiring/connector repairs may be a necessity in these cases. Do not replace modules if cable wiring is too short or misrouted.
- Inspect camera signal circuits 6972 and 6973 for any damaged terminal or wiring conditions.

Thanks to James Miller

2018 Mark of Excellence Program Enrollment

– continued from page 3

- Completing Bronze, Silver, Gold, Master and World Class Technician Certification
- Completing the four quarterly Product Knowledge Tests
- Achieving tenure with GM and employment at current dealership

Product Knowledge Tests

Technicians can earn a maximum of 1,000 points in the program is by completing the Mark of Excellence Product Knowledge Tests. The tests are available on the Center of Learning website at www.centeroflearning.com.

The four quarterly tests measure technicians' knowledge of GM products. Questions are based on GM training, Service Information, Service Bulletins and other resources. The first quarter test will be available in early January 2018.

TIP: The Product Knowledge Tests are not part of a technician's training path. They are listed separately under Mark of Excellence Product Knowledge Tests.

Technicians who complete each test with a score of 80% or better will earn 200 ranking points. Those who also complete the test by the quarterly deadline (within the first 30 days of seminar availability) with a score of 80% or better will earn an additional 50 bonus points toward their year-end recognition award.

Technicians can earn a quarterly drawing entry for successfully completing (80% or better) the Product Knowledge Tests. 10 technicians per zone are selected by random drawing to receive 250 earnPOWER points. In addition, technicians who successfully complete all four Product Knowledge Tests will receive an apparel item at years end.

Mark of Excellence Awards

A variety of awards can be earned in the Mark of Excellence Program based on technicians' level of achievement. 2018 awards include:

- Apparel for completing all four Product Knowledge Tests with a score of 80% or better
- Toolbox Medallion for completing a minimum of four Gold Level Certifications
- Top Zone Criteria Ranking technicians earn additional earnPOWER points as well as the opportunity for themselves and a guest to attend a zone banquet (top 20 technicians per zone)
- Top 50 National Criteria Ranking technicians earn the national travel award for a 3-day/2-night trip

Thanks to Diana Sancya

TECHLINK

GM TechLink is published for all GM retail technicians and service consultants to provide timely information to help increase knowledge about GM products and improve the performance of the service department.

Publisher:
John Meade
GM Customer Care and Aftersales

Editor:
Lisa G. Scott
GM Customer Care and Aftersales

Technical Editor:
Mark Spencer
mspencer@gpstrategies.com

Production Manager:
Marie Meredith

Creative Design:
5by5 Design LLC
dkelly@5by5dzign.com

Fax number:
1-248-729-4704

Write to:
TechLink
PO Box 500
Troy, MI 48007-0500

GM TechLink on the Web:
GM GlobalConnect