TECH LINK

Mid-June 2019, Volume 21, No. 12

WORK IT!

All-New 2020 Chevrolet Silverado HD and GMC Sierra HD Debut

2020 Silverado HD and Sierra HD Powertrains

see page 6

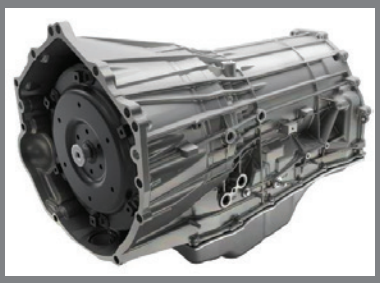

All-New Allison 10-Speed Automatic Transmission

see page 8

All-New 2020 Chevrolet Silverado HD and GMC Sierra HD Debut

Bigger, stronger and more powerful than ever, the completely new 2020 Chevrolet Silverado 2500HD/3500HD and GMC Sierra 2500HD/3500HD trucks offer increased capability and an expanded range of options for customers. Compared to the current HD models, the new trucks are larger in virtually every measure. The HD trucks are available in 3/4-ton 2500, 1-ton 3500 single rear wheel, and 1-ton 3500 dual rear wheel configurations with either 2WD or 4WD.

The Silverado HD lineup includes Work Truck, Custom, LT, LTZ, and High Country models. Sierra HD models include Sierra, SLE, SLT, new AT4, and Denali trim lines.

The trucks offer a number of advanced features designed to deliver for HD customers, including:

- Enhanced cooling system for vehicles equipped with the Duramax® 6.6L diesel engine
- Available Autotrac Active 2-speed transfer case on 4WD models
- Available dual alternators on both gasoline and diesel engine options for power needed in commercial applications
- A modular front on the trucks that enables easier mounting of a snowplow

MultiPro tailgate

- Available 120 V alternating current power outlet located at the rear of the cargo box for electrical equipment that uses a maximum of 150 watts
- Available power up/down tailgate on Silverado HD and the innovative MultiPro tailgate on Sierra HD
- Available enhanced trailering system featuring a class-leading 15 camera views

POWERTRAINS

There are a choice of two powertrains: the standard all-new 6.6L V8 gasoline engine (RPO L8T) and 6-speed 6L90 automatic transmission or the available Duramax® 6.6L V8 diesel engine (RPO L5P) and the all-new Allison 10-speed automatic transmission with an available integrated PTO option.

The HD trucks have exceptional towing capabilities.

The new 6.6L V8 gas engine features a cast-iron small block with aluminum heads and direct fuel injection. It produces 401 horsepower and 464 lb.-ft. of torque. With a longer stroke, it delivers more than 21 percent greater torque than the previous 6.0L V8 gas engine.

The Duramax 6.6L V8 turbo-diesel engine produces 445 horsepower and 910 lb.-ft. of torque and offers exceptional durability with its hardened engine block that uses a deep skirt design and light-weight aluminum cylinder heads. Combined with the new Allison 10L1000 automatic transmission, the HD trucks have a 35,000 lb. maximum towing rating when properly equipped.

CONTINUED ON PAGE 3

ALL-WHEEL DRIVE

The available Autotrac system (RPO NQH) is a 2-speed automatic, active transfer case. The system provides five modes: Auto 4WD, 4HI, 4LO, 2HI and Neutral. The Auto 4WD position offers the capability of an active transfer case with on-demand torque biasing wet clutch and easy vehicle tuning through software calibrations. The software calibrations allow for vehicle speed dependent clutch torque levels to enhance the performance of the system.

For example, the system is calibrated to provide 0–5 lb.-ft. of clutch torque during low speed, low engine torque operation, and predetermined higher torque for 25 mph (40 km/h) and greater. These calibrations prevent crow-hop and binding at low speeds and provide higher torque biases at higher vehicle speeds in order to enhance stability.

Autotrac system controls

NEW TECHNOLOGY

The HD trucks offer an extensive number of new technologies and safety features, including:

- Forward Collision Alert
- Following Distance Indicator
- Automatic Emergency Braking
- Front Pedestrian Braking
- Front and Rear Park Assist
- Rear Cross Traffic Alert
- Lane Departure Warning
- Safety Alert Seat
- HD Surround Vision
- Head-Up Display

Many of the vehicle controls, including some safety features, the available diesel exhaust brake, and available Integrated Trailer Brake Controller can be operated or turned on/off using the switchbank and other controls on the center of the instrument panel.

Many vehicle controls are easily accessed on the center switchbank.

TRAILERING SYSTEM

The available Advanced Trailering System (Silverado HD) and ProGrade Trailering System (Sierra HD) features up to15 camera views (up to two accessory cameras can be installed), including high-definition Surround Vision and other unique views, such as a transparent trailer view feature to help see behind the trailer when towing and a hitch view camera that aids in connecting a trailer to the vehicle. To check the available camera views when in Drive, touch the Camera icon on the infotainment screen and select the desired view. Touch X on the screen to exit the view.

In addition to the trailering system, other trailer technologies and hardware that are available on the new HD trucks include:

- Auto Electric Park Brake – automatically applies the parking brake to help maintain truck position when hitching
- New Park Grade Hold Assist – enhances hill hold by using braking effort at each wheel for an extended period of time

CONTINUED ON PAGE 4

All-New 2020 Chevrolet Silverado HD and GMC Sierra HD Debut

- Integrated Trailer Brake Controller – works with the trailer profile in the Trailering App to recall a specified trailer's most recent gain setting
- Tow/Haul Mode – remains engaged on the next key-on cycle, for up to four hours; includes a reminder the feature is engaged
- Hill Start Assist and Hill Descent Control
- Trailer Sway Control
- Auto Grade Braking and Diesel Exhaust Braking
- Digital Variable Steering Assist – dynamically optimizes power steering according to driving scenarios, including trailering, and enables road pull compensation and other features
- Trailering Info Label – located on the driver's door jamb with the truck's specific trailering information, including curb weight, GVWR, GCWR, maximum payload, maximum tongue weight and rear GAWR.

Available transparent trailer view (requires accessory camera)

New, larger door-mounted trailering mirrors are standard on all 2500HD and 3500HD models. The trailering mirrors have been redesigned with improved perimeter lighting. The mirrors extend and retract using a four-bar-link system for smooth operation, whether done manually or with the available power extension controls. A new forward-facing spot lamp on each mirror shines

The trailer mirrors can be extended for enhanced visibility.

light at about a 45-degree angle, providing illumination on the job site or campsite. There also are side-view cameras mounted within the mirror housings, and when equipped, mirror-mounted puddle lamps and two rearward-facing spot lamps.

To extend the trailering mirrors manually, grasp the mirror housing firmly and pull back in one motion, arching slightly toward the rear of the vehicle. To return the mirror to its original position, reverse the motion.

ACTION CENTER

A Technical Assistance Center (TAC) Action Center (U.S.) has been established for product feedback on the 2020 Silverado HD and Sierra HD. Any vehicle issues that warrant prompt and immediate attention should be reported to TAC, not just concerns requiring technical assistance. Any concerns will be answered by a Silverado HD/Sierra HD specialist. The Action Center is connected directly to TAC, Engineering, and the assembly plant in order to address any product concerns.

To report a concern, create a TAC Case using the Dealer Case Management (DCM) system. Refer to Bulletin #08-00-89-014E for more information about using the DCM system. The Silverado HD/Sierra HD specialist will provide any diagnostic direction as needed through the DCM. Contact TAC if needed once a case has been started.

For additional information on the new 2020 Silverado HD and Sierra HD, refer to Bulletin #19-NA-091.

▶ Thanks to Kevin Minor and Sherman Dixon

Update: Phone Ringtone Plays Continuously after Incoming Call

The ringtone on a mobile phone may sound continuously through the vehicle speakers after an incoming call on some 2018-2019 Sonic, Trax, Terrain; and 2019 Blazer, Camaro, Colorado, Equinox, Malibu, Silverado 1500, Sierra 1500, and Canyon models equipped with the Infotainment 3 Low system (RPO IOR). The continuous ringtone, which will sound for the remainder of the ignition cycle, is found only with Android phones running OS 9.0 and that have the Android Auto app installed. The phone must be paired via Bluetooth or tethered to the infotainment system using Android Auto. The ringtone condition is caused by an integration concern between the vehicle and the phone.

The customer's phone software can be updated in order to correct the ringtone condition. Remind customers to always update their phones with the latest software available.

TIP: The phone software is released by the individual cellular carriers, which may cause the release dates and software versions to vary slightly between cellular carriers. Once the phone update is installed, no further action is necessary. Installation of the update resolves this condition without having to perform the previous work-around to modify the phone settings.

UPDATE THE PHONE

To identify if the phone needs to be updated:

1. On the phone, select Settings > About Phone > Software Information.
2. View the Baseband version of the software. The last four characters of the Baseband version should be one of the following or greater: CSC1, CSC2, CSC7, or CSC8.

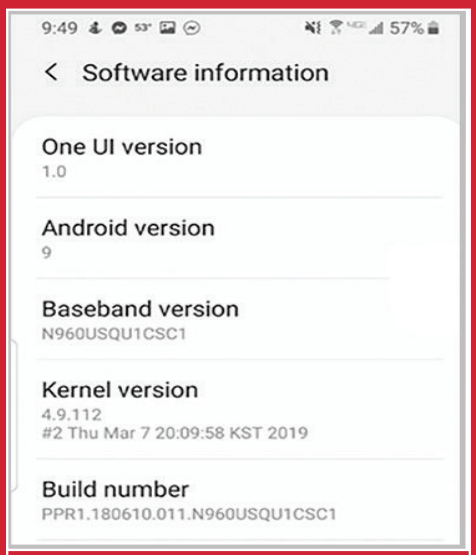

Check the Baseband version of the software to determine if a phone update is necessary.

The 4th character from the end (C) indicates the year released. The 3rd character from the end (S) indicates the month. If these characters listed under Baseband version on the phone are less than the version listed above, instruct the customer to update the phone.

For additional information, refer to #PIT5655B.

▶ Thanks to Jeremy Richardson

Broken Spark Plug Center Isolator

An engine misfire condition and DTC P0300 (Engine Misfire Detected) may be found on some 2016-2019 Cruze models with the 1.4L engine (RPO LE2); 2016-2019 Malibu models with the 1.5L engine (RPO LFV); 2016-2019 Spark models with the 1.4L engine (RPO LV7); 2016-2019 Volt models with the 1.5L engine (RPO L3A); and 2018-2019 Equinox and Terrain models with the 1.5L engine (RPO LYX).

If there is an engine misfire or engine misfire-related DTC set, remove the spark plugs from the engine and inspect for a broken center insulator by inverting the spark plug. Once the spark plug has been inverted, if the center insulator is broken, it will slide down the center electrode.

If center insulator is broken, replace all four spark plugs. Clear any DTCs and evaluate engine performance.

▶ Thanks to Robert Halas

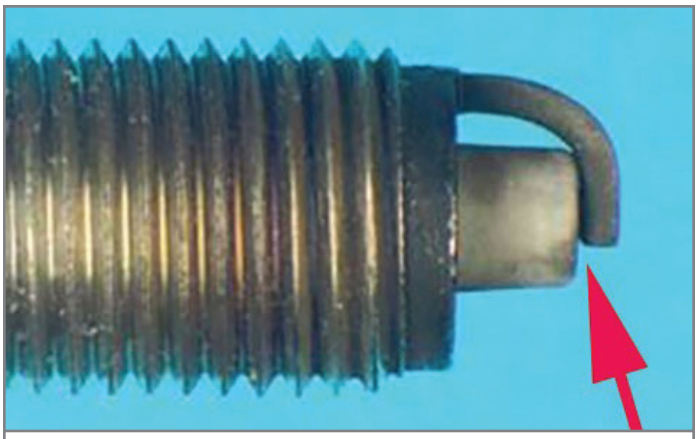

Broken center insulator covering the center electrode

2020 Silverado HD and Sierra HD Powertrains

The all-new 2020 Silverado HD and Sierra HD trucks offer two powertrain choices: the all-new 6.6L V8 gasoline engine (RPO L8T) paired with the 6-speed 6L90 automatic transmission (RPO MYD) and the Duramax 6.6L V8 diesel engine (RPO L5P) mated to the all-new Allison 10L1000 10-speed automatic transmission (RPO MGM, MGU).

6.6L V8 GASOLINE ENGINE

The new 6.6L V8 gas engine uses a cast-iron small block with aluminum heads, a forged steel crankshaft, forged powder-metal connecting rods and additional high-strength components for long-term durability. It generates 401 horsepower and 464 lb.-ft. of torque — that's 22 percent more torque and up to 18 percent more towing capability when compared to the previous 6.0L V8 gas engine. With variable valve timing and spark ignited direct injection (SIDI), it delivers precise fuel control that enables a compression ratio of 10.75:1 for enhanced performance and fuel efficiency.

6.6L V8 gasoline engine

The fuel system is an electronic returnless on-demand design that reduces the internal temperature of the fuel tank by not returning hot fuel from the engine to the fuel tank for lower evaporative emissions. The electric turbine-style fuel pump attaches to the fuel tank fuel pump module inside the fuel tank. The high pressure fuel pump, fuel rail pressure, fuel injection timing, and injection duration are controlled by the Engine Control Module (ECM).

The fuel pressure sensor is a serviceable 5 V, 3-pin device that is located on the fuel feed line forward of the fuel tank.

The engine oil capacity with filter is 8 quarts (7.6 liters) and dexos® 1 Approved – GEN 2 viscosity grade 5W-30 engine oil is required.

The 6.6L gas engine also will be offered with dual alternators to support the electrical needs for trailering, snowplowing and other jobs.

DURAMAX 6.6L V8 DIESEL ENGINE

Maximum power and towing capability in new HD trucks comes from the proven Duramax 6.6L V8 turbo-diesel engine that produces 445 horsepower and 910 lb.-ft. of torque. Its towing capability is increased up to 52 percent with driveline improvements including the addition of the all-new Allison 10L1000 10-speed automatic transmission.

The hardened engine block uses a deep skirt design for increased rigidity while the light-weight aluminum cylinder heads quickly dissipate heat. The four valves per cylinder and ports have a high swirl design to improve combustion.

The engine uses eight ceramic glow plugs that enable greater efficiency through higher temperature capability and faster pre-heating time. Ceramic glow plugs are considered one-time-use because they are much more sensitive to damage than conven-

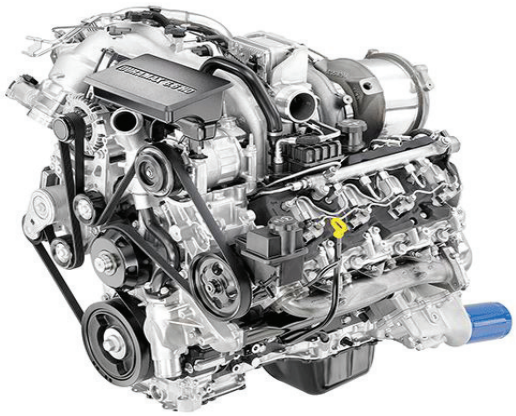

Duramax 6.6L V8 diesel engine

CONTINUED ON PAGE 7

tional glow plugs. Anytime a ceramic glow plug is removed from the cylinder head, install a new glow plug. Clean the glow plug bore of any carbon build-up before installing the new plug.

The engine oil capacity with filter is 10 quarts (9.5 liters) and 15W-40 viscosity grade engine oil with an API CJ-4 or CK-4 designation is required. In extreme cold weather below 0°F (–18°C), use 5W-40 engine oil.

The diesel exhaust aftertreatment system is designed to reduce the levels of hydrocarbons (HC), carbon monoxide (CO), oxides of nitrogen (NOx), and particulate matter (PM) in the engine exhaust gases. Reducing these pollutants to acceptable levels is achieved using a Diesel Oxidation Catalyst (DOC), Select Catalyst Reduction (SCR), and a Diesel Particulate Filter (DPF). Proper operation of the diesel exhaust aftertreatment system requires the use of ultra-low sulfur diesel (ULSD) fuel and Diesel Exhaust Fluid (DEF).

The DEF tank is relocated farther back on the HD truck's frame and out of sight from the exterior. The DEF filler inlet is located next to the fuel filler for convenient filling. An electronic gauge display on the Driver Information Center (DIC) indicates the DEF fluid level. In addition, as the DEF level becomes low, warning are displayed on the DIC. As the tank nears empty, vehicle speed will be limited in a series of steps. At least 2 gallons (7.57 L) of DEF must be added to release the speed limitation.

DEF filler is located next to the fuel filler.

AFTER-RUN COOLING

The new diesel after-run feature on the Duramax engine was specifically engineering for use following a demanding towing situation. The after-run system allows the engine to keep running for up to 15 minutes to allow it to cool down by running the larger 28-inch (71 cm) diameter, variable speed fan and circulating coolant. The system notifies the driver that required engine cooling is needed when the transmission is shifted to Park by displaying an alert on the Driver Information Center (DIC) that states to keep the engine running for cool down. If the message is ignored and the vehicle is turned off and exited, the truck will restart on its own via remote start mode for cool-down. The truck will turn off when the engine reaches an acceptable temperature.

ENGINE COOLANT HEATER

The engine coolant heater outlet has been moved to a more convenient, external location on the driver's side of the truck, integrated into the front bumper, which eliminates the need for a cord to hang out of the grille or to open the hood for plug-in. The coolant heater operates using 110 V alternating current from an external power source and is designed to warm the coolant in the engine block area for improved starting in weather conditions that are colder than 0°F (–18°C). Vehicles with an engine block heater should be plugged in at least four hours before starting. An internal thermostat in the plug-end of the cord may exist, which will prevent engine coolant heater operation at temperatures warmer than 0°F (–18°C). The coolant heater also helps reduce fuel consumption when a cold engine is warming up. The unit is equipped with a detachable AC power cord. A weather shield on the cord is provided to protect the plug when not in use.

The engine coolant heater outlet is integrated into the front bumper.

For additional information on the new 2020 Silverado HD and Sierra HD, refer to Bulletin #19-NA-091.

Thanks to Kevin Minor and Sherman Dixon

All-New Allison 10-Speed Automatic Transmission

The all-new Allison 10-speed 10L1000 automatic transmission (RPO MGM, MGU) available on 2020 Silverado HD and Sierra HD models equipped with the 6.6L Duramax diesel engine combines enhanced performance, fuel economy, and operational flexibility with an industry-leading reputation for reliability. Designed for high-performance and low-maintenance, the new 10-speed transmission — the first-ever offered in the heavy-duty pickup segment — has been tested and validated in partnership with Allison Transmission and, combined with the proven Duramax 6.6L diesel engine, offers a powertrain combination that provides superior power delivery and productivity.

10L1000 automatic transmission

TRANSMISSION ARCHITECTURE

The transmission has 10 speed ratios that are generated using four simple planetary gear sets, two brake clutches, and four rotating clutches. The on-axis transmission architecture uses a squashed torque converter, an off-axis pump and four close-coupled gear sets. The four rotating clutches are located forward of the gear sets to minimize the length of oil feeds that provide for enhanced shift response. There are different variants of the transmission, all based on torque capacity. Architecture is common between the variants, and component differences are primarily related to size.

The transmission architecture features a case with an integral bell housing for enhanced powertrain stiffness. A unique pump drive design allows for off-axis packaging very low in the transmission.

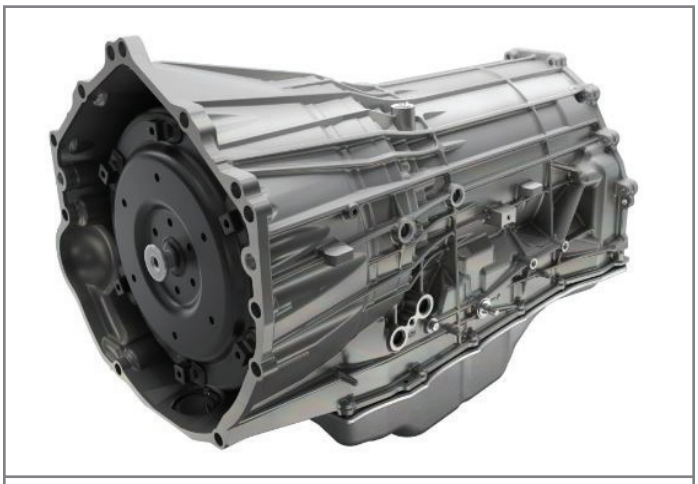

Transmission case with integral bell housing

The pump is a variable vane type, which effectively allows for two pumps in the packaging size of one. This design and packaging strategy provides for ideal oil routing to the controls system with the pump located in the valve body itself.

The 4-element torque converter contains a pump, a turbine, a pressure plate splined to the turbine, and a stator assembly. The torque converter acts as a fluid coupling to smoothly transmit

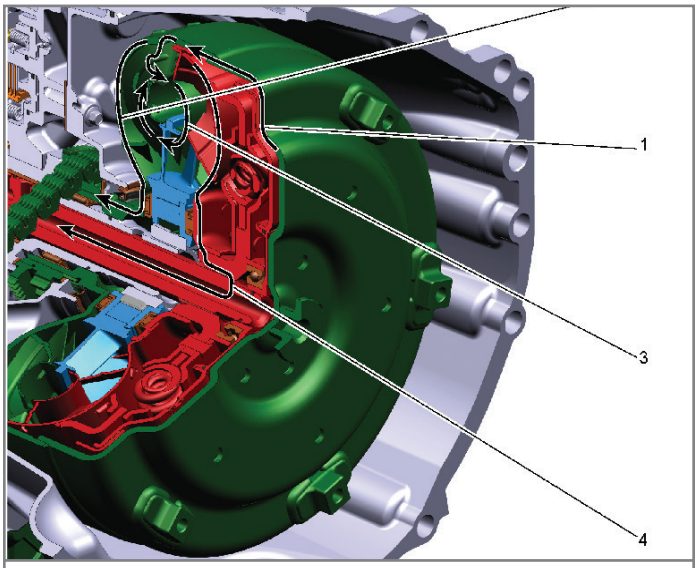

4-element torque converter

CONTINUED ON PAGE 9

power from the engine to the transmission. It also hydraulically provides additional torque multiplication when required. The pressure plate, when applied, provides a mechanical direct drive coupling of the engine to the transmission.

The hydraulic system primarily consists of an off-axis gear-driven variable vane-type pump next to the valve body, and two control valve body assemblies. The pump maintains the working pressures needed to stroke the clutch pistons that apply or release the friction components, which consist of six multiple disc clutches. The multiple disc clutches deliver 11 different gear ratios, 10 forward and one reverse, through the gear sets.

TRANSMISSION CONTROL SOLENOID VALVES

The Transmission Control Module (TCM), which is externally mounted, uses three speed sensor signals for enhanced shift response and accuracy .The TCM receives and monitors various electronic sensor inputs and uses this information to shift the transmission at the optimum time.

The 10-speed transmission could contain a maximum of nine individual solenoids — RPO dependent — installed in various bore locations on the lower control valve body assembly and internal transmission case. Eight of the nine solenoid valves are used to control pressure regulation and direction of transmission fluid. The one on/off solenoid valve is only used to direct transmission fluid. The normal operating current range for these solenoid valves is between 0–1.2 amps. If the TCM detects an electrical circuit malfunction or excessive current flow, the TCM will turn off the high-side driver to that solenoid and set a DTC.

Transmission control solenoid valves 1–8 are pressure regulating valves. Each solenoid valve is tested after assembly to determine the output fluid pressure at certain electrical values, applied to the coil winding, and is referred to as solenoid current/pressure data points. The current versus pressure data points are saved and assigned a file number, which is marked on the solenoid valve housing end or on the valve body itself. The solenoid performance data file is programmed and stored in the vehicle's TCM as well as stored on the Techline Information System (TIS) website. Replacing any of the following components require the TCM to be programmed with either the new or existing solenoid valve performance data, depending on what component is replaced.

- Transmission assembly – program the TCM with the new data file stored on the TIS web site for all pressure regulating solenoid valves.
- Lower control valve body assembly with solenoid valves – program the TCM with the new data file stored on the TIS web site for all pressure regulating solenoid valves.
- Transmission Control Module – program the TCM with the existing data file stored on the TIS web site for all pressure regulating solenoid valves.
- One or more solenoids – program the TCM with the new data file stored on the TIS web site for all pressure regulating solenoid valves that were replaced.

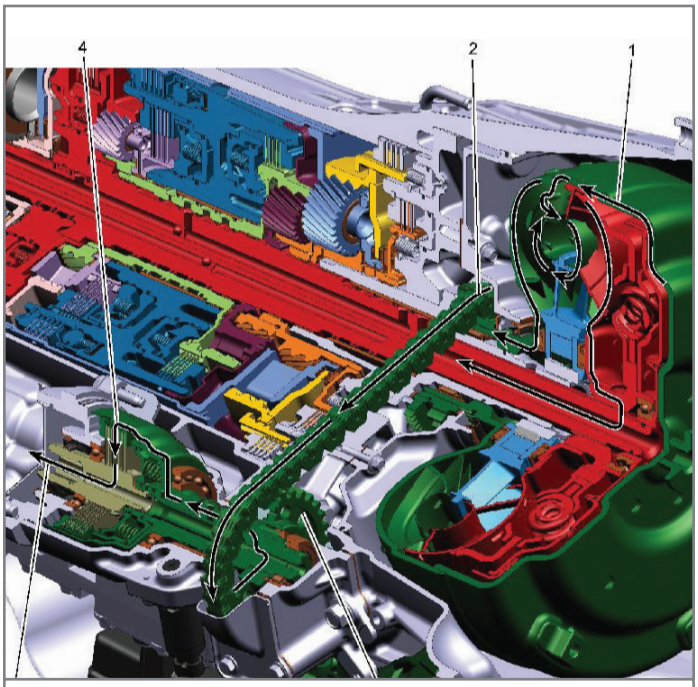

The PTO's drive gear is operated via a chain (#2) to direct engine power.

POWER TAKE-OFF

The available all-new factory-integrated, engine-driven Power Take-Off (PTO) eliminates the need for an aftermarket unit. Exclusively offered with the 10-speed transmission (RPO MGU) on select diesel models, it's the first fully integrated PTO system in the HD truck segment, with the PTO's drive gear operated via chain to direct engine power. And because it is engine-driven rather than turbine-driven, the PTO can be used while the vehicle is idling. A button inside the cab enables the PTO, and a mode selector allows adjustment of load and torque output.

▶ Thanks to Kevin Minor and Sherman Dixon

Spray-in Bed Liner Repairs

A spray-in bed liner (RPO CGN, PDL) is available on 2013-2014 Silverado HD 2500/3500, Sierra HD 2500/3500; 2014 Silverado 1500, Sierra 1500; and 2015-2019 Colorado, Silverado, Canyon and Sierra models. The bed liner is applied directly to the truck bed at the factory, which creates a bonding coating that prevents water, dirt, dust and other contaminants from affecting the painted metal surface of the truck bed.

The bed liner has a black finish that resists degradation from exposure to sunlight, chemicals, and other environmental factors while providing a textured surface that helps prevent slippage or movement of items stored in the bed. The coating also resists scratches, dents and dings that would damage a regular painted surface.

The finish resists degradation and provides a textured surface.

Because the bed liner material is sprayed on evenly, any variation in the bed, such as seam sealer or spot welds in the sheet metal, will show underneath the spray-on coating. The coating does not completely fill in these variations.

Spot weld under the bed liner

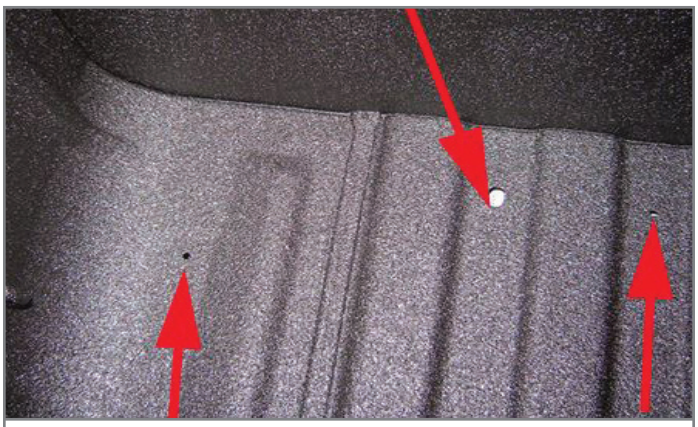

Drain holes in the bed liner

TIP: The spray-in bed liner has been specifically designed and tested for GM trucks. The spray-in bed liner was not designed for use with the GM Accessory Cargo Management System offers on 2010 and prior models.

The bed liner also features several drain holes that provide openings for drainage in the bed.

BED LINER CARE

The shine and luster of the bed liner can fade from oxidation, road dirt, heavy-duty hauling and hard water stains. To help keep the bed liner looking and performing well, it is recommended that it be cleaned at the same time and manner as the rest of the vehicle by washing using a mild detergent and rinsing the liner. Automatic car wash residue may leave a white film, which can be removed with normal washing and brushing if needed.

Do not use silicone-based protection products to clean the bed liner as they may reduce the effectiveness of the slip resistant texture. Silicone-based materials may also degrade the spray-in bed liner surface. A specific silicone-free bed liner conditioner is available through your GM dealership.

To restore the original appearance, wash the bed liner with a mild detergent. Once the liner is dry, apply the silicone-free bed liner conditioner and let dry. The conditioner will spray on blue, but will dry clear.

CONTINUED ON PAGE 11

REPAIRS

Bed liner repairs should be handled similar to other body repairs and sublet to an appropriate vendor or performed by the dealership, if proper equipment and skill set are available, including all warranty repairs, New Vehicle Damage claims, customer pay and collision repairs.

Repairs to the spray-in bed liner fall into small or large categories. The size of the damage will determine how the repair procedure should be performed. Any damage to the underlying sheet metal must be repaired, including corrosion protection, prior to repairing the bed liner material.

Most large repairs will likely be performed by an approved Ultimate Linings authorized dealer network facility and submitted as a sublet repair if it is a warranty claim or New Vehicle Damage claim. These facilities can be found at gmbedlinerrepair.com.

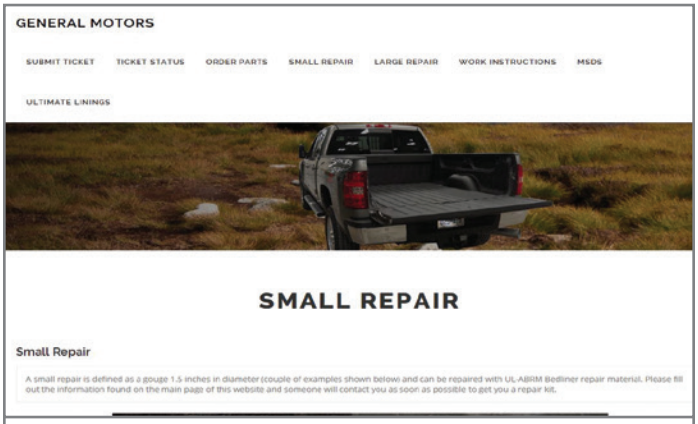

gmbedlinerrepair.com website

All repair information, parts and/or facilities that can perform the repairs are listed on the website.

Small repairs (a repair 1.5 in. (40 mm) in diameter or less) can be completed using a repair kit that can be ordered at gmbedlinerrepair.com. Select the Order Parts link.

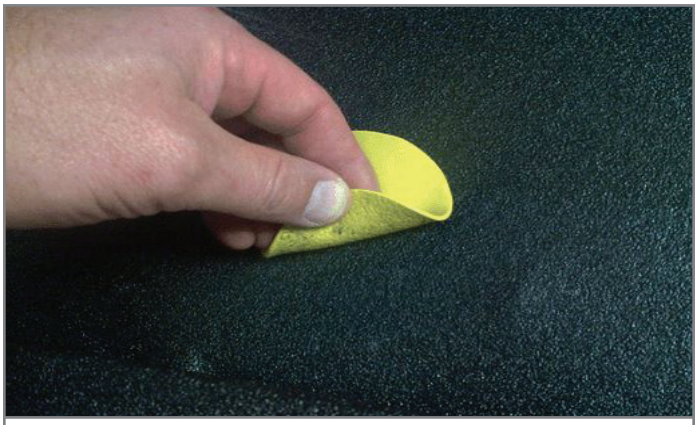

Small bed liner repair

The dealership or an authorized repair center can complete this repair. It is for small areas of damage and uses a twin pack of repair material and dual cartridge caulk gun along with a pattern patch.

For additional information about spray-in bed liner repairs, refer to the latest version of Bulletin #12-08-51-002.

▶ Thanks to Tom Renno

Transmission Valve Body Part Unique Number

The 10L80 and 10L90 10-speed automatic transmissions (RPO MHS, MHW, MF6, MGL, MQB) available on 2017-2019 Camaro, 2018-2019 Escalade, Tahoe, Yukon Denali, 2019 CT6, Silverado 1500, Sierra 1500, and Suburban models feature a Part Unique Number that may contain the letter O or the number zero.

If the transmission valve body is replaced, the software may not accept the Part Unique Number (PUN) during the characterization procedure if the PUN is incorrect. Keep in mind that the PUN may contain the letter O as well as the number 0 (zero).

The PUN must be entered correctly during programming. Be sure to enter the PUN accurately and to take notice of the difference between the letter O and the number zero.

▶ Thanks to Terry Neuendorf

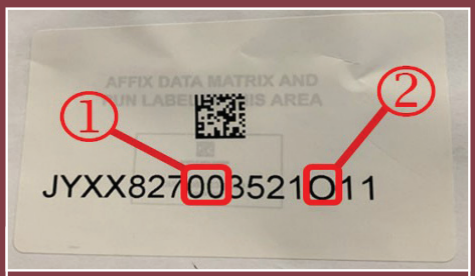

1. Number 0 2. Letter O

Coolant Heat Shrink Hose Clamp

The 2019 Silverado 4500HD/5500HD/6500HD is equipped with the 6.6L Duramax diesel engine (RPO L5D). The engine uses heat shrink clamps to secure the engine coolant hoses.

If a coolant heat shrink clamp needs to be replace for a coolant leak or a service repair, it may be difficult to reinstall a heat shrink clamp to seal the coolant hose in some locations. Where possible, a heat shrink clamp should be used in all places where they are installed.

If there is a location underhood where it is difficult to get enough accessibility in order to use a heat gun to properly install the heat shrink clamp, use a hose clamp (part number 1518389C1) and torque the clamp to the proper specification (9-11 Nm or 79–97 lb. in.).

When installing a heat shrink clamp:

1. Slide the heat shrink clamp fully over the fitting bead and as close to the hose end as possible.
2. Turn heat shrink clamp so the writing on the clamp is fully visible.
3. Set the heat gun to the high setting.
4. Using the heat gun in a constant steady motion, apply heat to as much of the heat shrink clamp as possible.
5. Continue heating the clamp until the printed information on the heat shrink clamp turns gray, indicating that enough heat has been applied.
6. Stop heating the clamp.
7. Check the quality of the seal by trying to turn the hose by hand. Neither the hose nor heat shrink clamp should turn.

Thanks to Bob Briedis

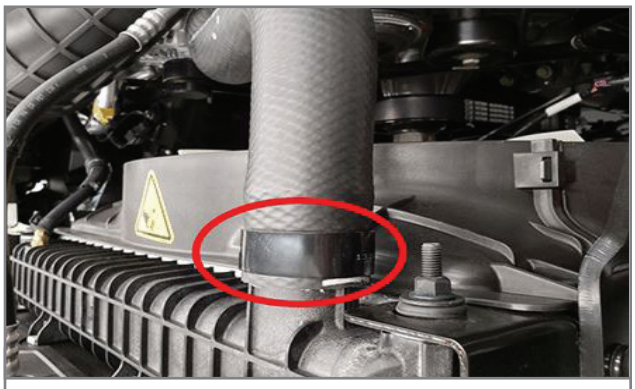

Coolant heat shrink hose clamp

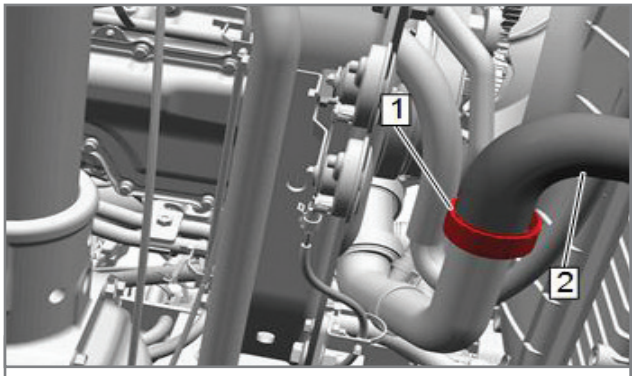

Heat shrink clamp on the radiator outlet hose

GM TechLink is published for all GM retail technicians and service consultants to provide timely information to help increase knowledge about GM products and improve the performance of the service department.

Publisher:
John Meade
GM Customer Care and Aftersales

Editor:
Lisa G. Scott
GM Customer Care and Aftersales

Technical Editor:
Mark Spencer
mspencer@gpstrategies.com

Production Manager:
Marie Meredith

Creative Design:
5by5 Design LLC
dkelly@5by5dzign.com

Write to:
TechLink
PO Box 500, Troy, MI 48007-0500

GM TechLink on the Web:
GM GlobalConnect